LK+ CO2+VOC LCD

Duct sensor for air quality, temperature and humidity (optional)

thermokon®
HOME OF SENSOR TECHNOLOGY

Datasheet

Subject to technical alteration
Issue date: 29.05.2017

Application

Duct air quality sensor for detection of CO2, VOC, optional temperature and Humidity. With a mix output, a mixture of CO2 and VOC signals can be realized. The mixing ratio can be configured with the USE app. Designed for duct mounted applications with up to 4 0..10 V outputs. Mixed gas sensors detect gases and vapours which can be oxidised (burnt): Body odours, tobacco smoke, exhalations emitted by materials (furniture, carpets, paint, glue ...). LCD models with RGB background light have a transparent cover. Display configuration and threshold values for color changes can be parameterized via Thermokon USEapp. With the option board relay two-point controllers or a 2-stage 2-point controller for temperature or humidity can be realized.

Types Available

Duct sensor with display CO2 + VOC or mix – active 2x 0..10 V | 2x 4..20 mA

LK+ CO2+VOC LCD VV
LK+ CO2+VOC LCD AA

Duct sensor with display CO2 + VOC + temp +rH (opt.) or mix – active 3x/4x 0..10 V

LK+ CO2+VOC LCD 3xV
LK+ CO2+VOC LCD 4xV

Duct sensor with display CO2 + VOC or mix – active 2x 0..10 V + relay

LK+ CO2+VOC LCD VV relay

Options: additional passive temperature sensor
eg: PT100/PT1000/NI1000/NI1000TK5000/NTC10K... and other sensors on request.

Security Advice – Caution

The installation and assembly of electrical equipment should only be performed by authorized personnel.

The product should only be used for the intended application. Unauthorised modifications are prohibited! The product must not be used in relation with any equipment that in case of a failure may threaten, directly or indirectly, human health or life or result in danger to human beings, animals or assets. Ensure all power is disconnected before installing. Do not connect to live/operating equipment.

Please comply with

- Local laws, health & safety regulations, technical standards and regulations
- Condition of the device at the time of installation, to ensure safe installation
- This data sheet and installation manual

Notes on Disposal

As a component of a large-scale fixed installation, Thermokon products are intended to be used permanently as part of a building or a structure at a pre-defined and dedicated location, hence the Waste Electrical and Electronic Act (WEEE) is not applicable. However, most of the products may contain valuable materials that should be recycled and not disposed of as domestic waste. Please note the relevant regulations for local disposal.

Build-up of Self-Heating by Electrical Dissipative Power

Temperature sensors with electronic components always have a dissipative power, which affects the temperature measurement of the ambient air. The dissipation in active temperature sensors shows a linear increase with rising operating voltage. This dissipative power has to be considered when measuring temperature. In case of a fixed operating voltage (±0,2 V) this is normally done by adding or reducing a constant offset value. As Thermokon transducers work with a variable operating voltage, only one operating voltage can be taken into consideration, for reasons of production engineering. Transducers 0..10 V / 4..20 mA have a standard setting at an operating voltage of 24 V =. That means, that at this voltage, the expected measuring error of the output signal will be the least. For other operating voltages, the offset error will be increased by a changing power loss of the sensor electronics. If a re-calibration should become necessary later directly on the sensor, this can be done by means of a trimming potentiometer on the sensor board.

Remark: Occurring draft leads to a better carrying-off of dissipative power at the sensor. Thus temporally limited fluctuations might occur upon temperature measurement.

Information about Indoor Air Quality CO_2

EN 13779 defines several classes for indoor air quality:

Category	CO_2 content above the content in outdoor air in ppm		Description
	Typical range	Standard value	
IDA1	<400 ppm	350 ppm	Good indoor air quality
IDA2	400.. 600 ppm	500 ppm	Standard indoor air quality
IDA3	600..1.000 ppm	800 ppm	Moderate indoor air quality
IDA4	>1.000 ppm	1.200 ppm	Poor indoor air quality

Information about Self-Calibration Feature CO_2

All gas sensors are subject to drift caused by components. This fact results generally in the need to recalibrate the sensors regularly.

With dual channel technology Thermokon integrates automatic self-calibration for different fields of operation. In contrast to common used ABC-Logic sensors with self-calibration dual channel are suitable for applications operating 24 hours, 7 days a week as for example hospitals.

Manual calibration is not necessary!

Technical Data

Measuring values		CO2, VOC, temperature + humidity (depending on the device)
Output voltage		2x/3x 0..10 V or 0..5 V, min. load 10 kΩ (live-zero configuration via Thermokon USEapp)
Output Amp	AA	2x 4..20 mA, max. load 500 Ω
Output switch contact	Relay	2 floating contacts for 24 V ~ or 24 V = / 3 A
Power supply		15..35 V = or 19..29 V ~,
	AA	15..35 V =
Power consumption		max. 2,5 W (24 V =) | max. 4,3 VA (24 V ~)
Measuring range temp.	3xV | 4xV	0..+50 °C (default setting), optionally configured via Thermokon USEapp
Measuring range humidity	4xV	0..100% rH non-condensing, optionally configured via Thermokon USEapp (enthalpy, absolute humidity, dew point)
Measuring range CO2		0..2000 ppm (default), 0..5000 ppm (optionally configured via Thermokon USEapp)
Accuracy temperature	3xV | 4xV	±0,5K (typ. at 21 °C)
	passive	±0,3K (typ. at 21 °C), depending on used sensor
Accuracy humidity	4xV	±2% between 10..90% rH (typ. at 21 °C)
Accuracy CO2		±50 ppm +3% of reading (typ. at 21 °C, 50% rH)
Air speed		min. 0,3 m/s, max. 12 m/s
Calibration		self-calibration, Dual Channel
Sensor		VOC sensor (heated metal oxide semiconductor), CO2: NDIR (non-dispersiv, infrared)
Display		LCD 29x35 mm with RGB backlight
Enclosure		enclosure USE-M, PC, pure white, cover PC, transparent, with removable cable entry
Protection		IP65 according to EN 60529
Cable entry	VV | AA	M16, for wire max. Ø=8 mm
	Relay | 3xV | 4xV	M20, for wire max. Ø=10 mm; seal insert for double cable entry for wire max Ø=6 mm
Connection electrical		removeable plug-in terminal, max. 2,5 mm²
Pipe	VV | AA | Relay	PA6, black, Ø=19,5 mm, length 150 mm
	3xV | 4xV	PA6, black, Ø=19,5 mm, length 180 mm
Ambient condition		0..+50 °C, max. 85% rH short term condensation
Mounting		installation is also possible using mounting base

Mounting Advices

The sensor can be mounted on the ventilation duct by means of the mounting flange MF20 TPO (optional with mounting base). Align the openings on the sensor tube according to the flow direction.

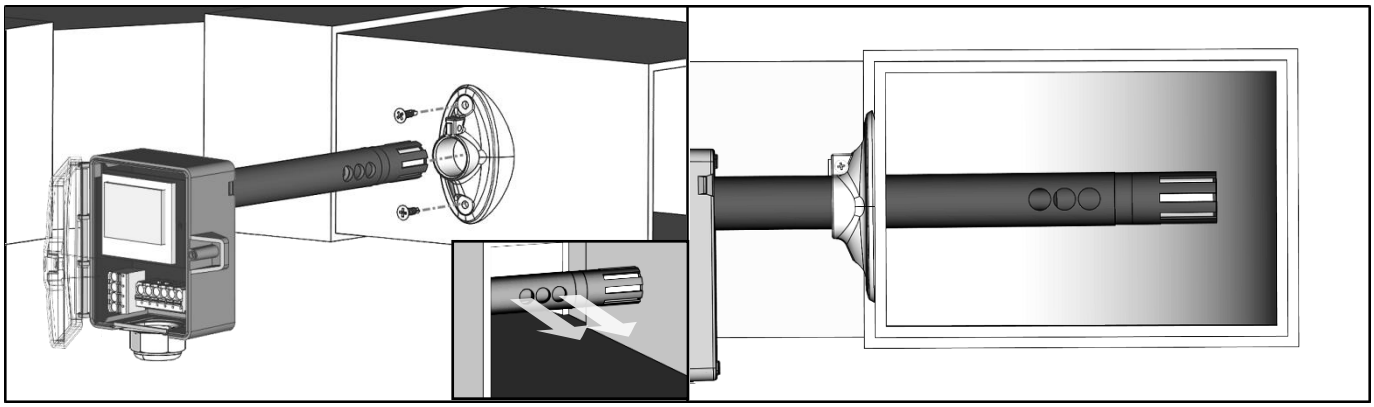

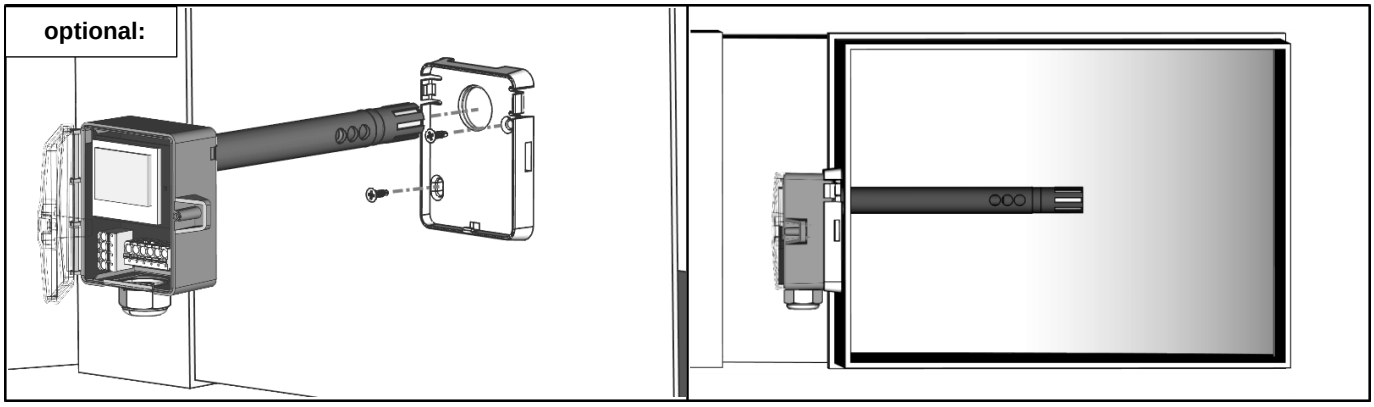

Connection Plan

To change the output voltage range (default: 0..10 V to 0..5 V) via jumper, the display must be removed from the board.

LK+ **CO2+VOC LCD VV**

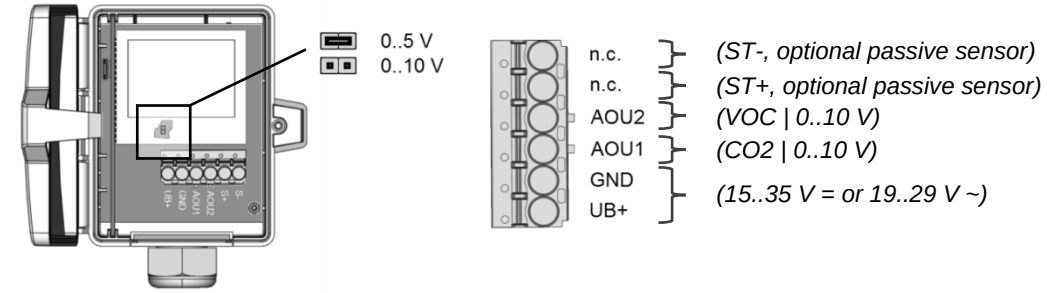

LK+ **CO2+VOC LCD AA**

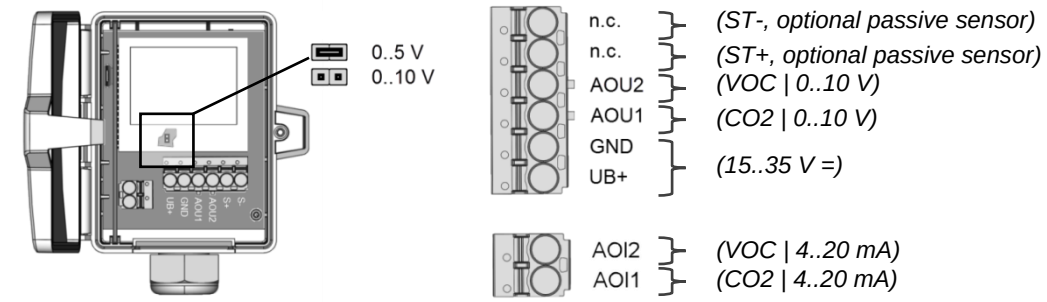

LK+ **CO2+VOC LCD 3xV**

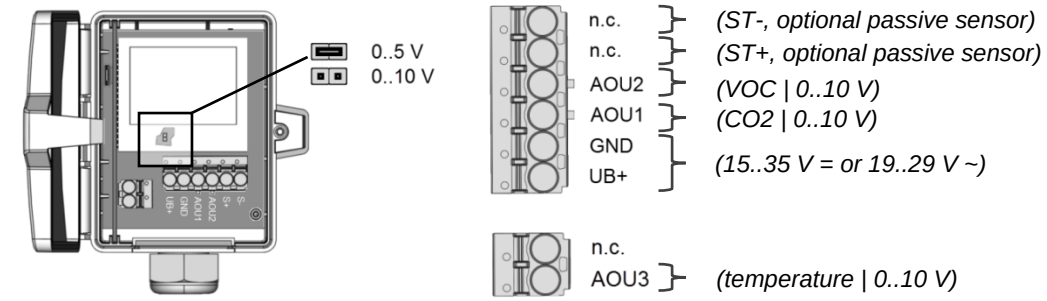

LK+ **CO2+VOC 4xV**

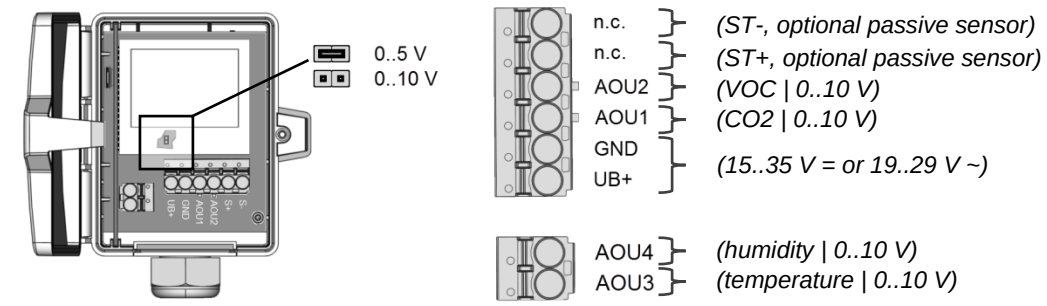

LK+ **CO2+VOC LCD Relay**

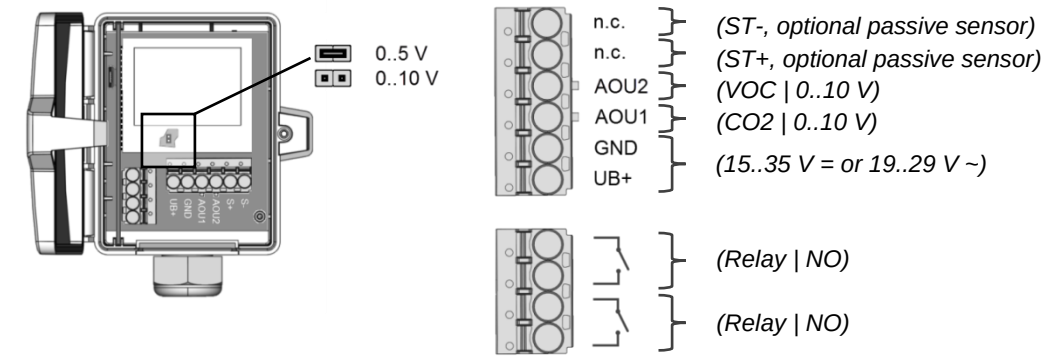

Configuration

The Thermokon bluetooth dongle with micro-USB is required for communication between USEapp and USE-M / USE L (Item No..: 668262). Commercial bluetooth dongles are not compatible.

Application-specific reconfiguration of the devices can be carried out using the Thermokon USEapp. The configuration is carried out in the voltage-supplied state.

The configuration-app and the app description can be found in the download area of our webpage.

→ **Download (APK-file for Android)**

Dismounting Advices

Remove the lower section of the sensor carefully and pulling straight out. **Pay close attention to the correct dismantling of the component!**

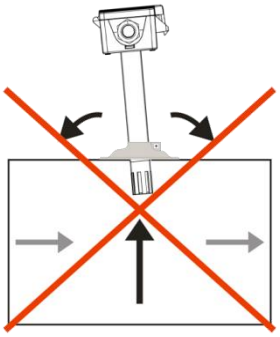

Dimensions (mm)

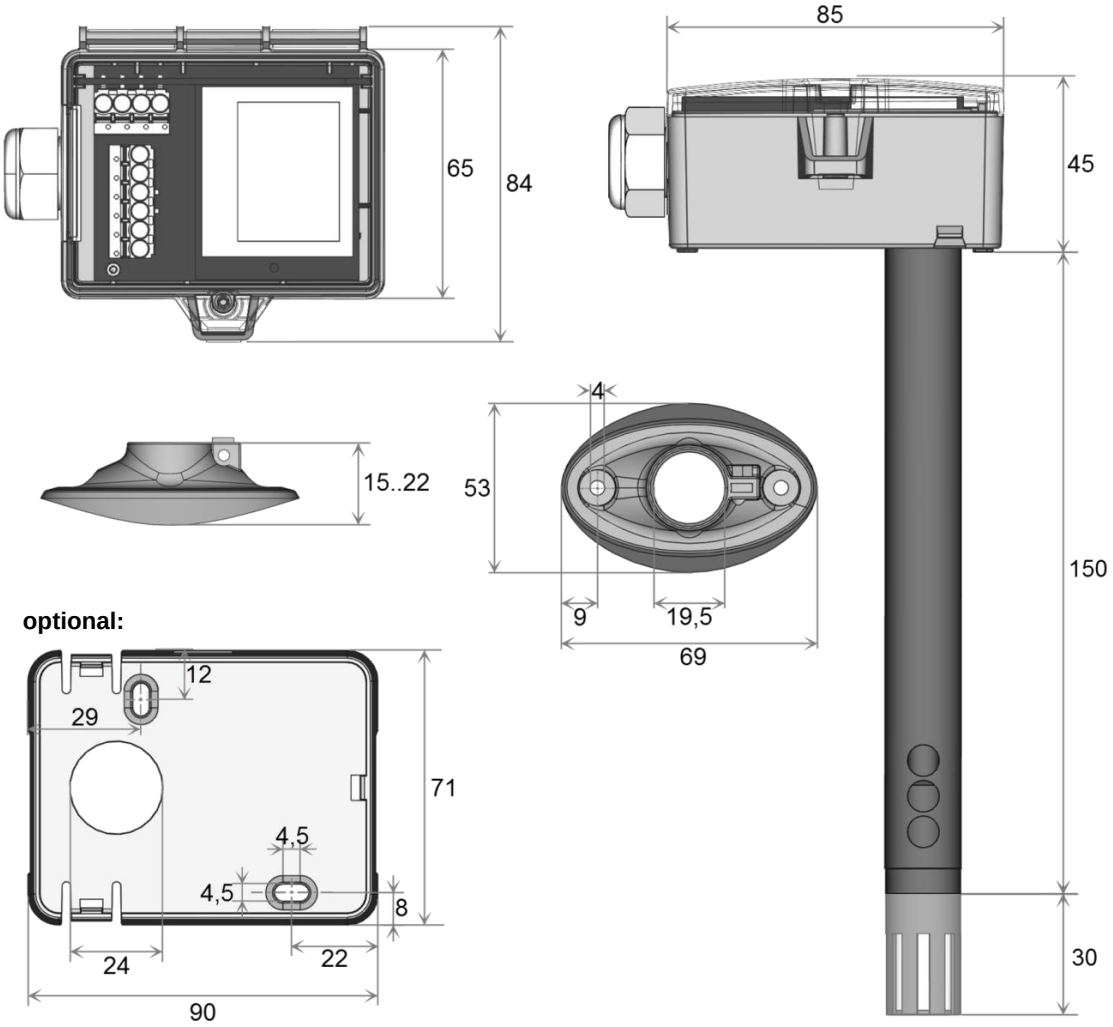

Accessories (included in delivery)

Mounting flange MF20 Item No. 612562
Mounting kit 2 **(only version VV & AA)** Item No. 640503

- Cable entry M16
- Cover screw
- 2 Screws (rounded head)

Mounting kit 3 **(only version 3xV/4xV/Relay)** Item No. 674133

- Cable entry M20
- seal insert for double cable entry 2x 6 mm
- Cover screw
- 2 Screws (rounded head)

Accessories (optional)

Bluetooth dongle Item No. 668262
Cable entry M25 USE white, sealing insert 4x Ø=7 mm (4 pcs) Item No. 641364
Mounting base Item No. 631228
Filter stainless steel, wire mesh Item No. 231169

M16 Sealing inserts cable entry (packaging unit 10 pcs.)

for wire with Ø	3 mm	5 mm	7 mm	8 mm
Item No	641036	641012	639248	641340

M20 Sealing inserts cable entry (packaging unit 10 pcs.)

for wire with Ø	2x6 mm	2x7 mm	6 mm	8 mm
Item No	641319	641333	641074	641081